RV generator set
Quiet Gasoline™ Series
RV QG 2800

Cummins **Onan**

Performance you rely on.™

Features and Benefits

- Lightweight.
- Gasoline or LP fueled.
- Quietest generator sets of their size.
- Easy maintenance with single-side service.
- Completely enclosed, quick, easy to install.
- 3-year limited warranty.
- Low fuel consumption.

Weight, size and sound level

Weight	113 lbs	(51 kg)
Length	24.0 in	(610 mm)
Width	16.4 in	(417 mm)
Height	12.3 in	(313 mm)
Sound	70 dB(A)	Readings at 10 ft (3 m) half load

- Meets National Park Service sound level requirements (60 dB(A) @ 50 ft) for use in national parks.
- Typical installation will further reduce sound level.

Models and ratings

Model	Fuel	Hz	RPM	Watts	Voltage	Amps	Phase	Circuit breaker
2.8 KV-FA/26100	Gasoline	60	3600	2800	120	23.3	1	25 A
2.8 KV-FA/6050*	Gasoline	60	3600	2800	120	23.3	1	25 A
2.5 KV-FA/26120	LP vapor	60	3600	2500	120	20.8	1	25 A
2.3 KV-FR/33742	Gasoline	50	3000	2300	230	10	1	10 A
2.3 KV-FR/5903	Gasoline	50	3000	2300	230 (1)	10	1	10 A
2.0 KV-FR/26119	LP vapor	50	3000	2000	230	8.7	1	10 A
2.0 KV-FR/5902	LP vapor	50	3000	2000	230 (1)	8.7	1	10 A

(1) Australia/New Zealand wire colors.

Ambient conditions for rated power output with muffler and RV enclosure, per ISO 8528-1:

- Temperature: 77° F (25° C)
- Altitude: 500 ft (152.4 m), (99 kPa dry)

Typical power output change based on ambient conditions:

- Temperature: Power output decreases 1% for every 10° F (5.5° C) increase
- Altitude: Power output decreases 3.5% for every 1000 ft (305 m) increase

Ratings represent minimums. Actual performance may be significantly higher based on installation and operating conditions.

* Evaporative spec: For trailer applications required to meet Tier III Evaporative Emissions of the California Air Resources Board.

Operating temperature range

	Low	High
Gasoline	-20° F (-29° C)	120° F (49° C)
LP	0° F (-18° C)	120° F (49° C)

- Depends upon LP tank capacity, surface area and butane content of LPG.

Cummins®, Onan®, the "C" logo, Performance you rely on.™ and Quiet Gasoline™ are servicemarks and/or registered trademarks of Cummins Inc. Specifications subject to change without notice. ©2007 Cummins Power Generation. All Rights Reserved.
A-1400h (7/07)

Standard features

- Cummins Onan sound-attenuating enclosure
- Focalized mounting system with vibration isolators
- Cross-flow cooling
- Sheet steel drip controlling base
- Enclosed muffler
- USDA Forest Service approved spark arrestor muffler
- Adjustable mechanical governor
- Automatic choke
- Engine preheat
- Overhead valves
- Single-side service
- Low oil level shutdown
- Electric fuel pump (gasoline); electric solenoid (LP)
- Mounted control panel
- Sealed remote start connector
- Electric start
- Fused DC circuits to protect set wiring and remote control wiring
- Magnetic circuit breaker
- 50 in (1.3 m) generator set output leads
- Solid-state ignition

Engine details

Model: Cummins Onan GH-200
Design: 4-cycle, single cylinder, OHV
Displacement: 12 in^3 (197 cm^3)
Compression ratio: 8.5:1
Power: 7.0 bhp (max) at 3600 r/min
Cooling: Pressurized air
Cooling air volume: includes engine cooling air volume
60 Hz: 300 ft^3/m (8.5 m^3/min) at 3600 r/min
50 Hz: 250 ft^3/m (7.1 m^3/min) at 3000 r/min
Fuel system: (Gasoline) electric fuel pump, fuel lift 3 ft (914 mm); (LP) electric fuel solenoid; automatic choke
Combustion air:
60 Hz: 12.5 ft^3/m (0.35 m^3/min) at 3600 r/min
50 Hz: 10.4 ft^3/m (0.3 m^3/min) at 3000 r/min
Ignition system: Breakerless, electronic
Starting system: Remote, 12 V, 3-wire negative ground; start-stop rocker switch on control; connector for remote start cable
Lubrication: Splash lubrication
Oil capacity: 1 qt (0.95 L)
Cylinder crankcase: Alloy aluminum with iron cylinder liner cast into the block
Oil base: Aluminum
Cylinder head: Alloy aluminum, removable

Average fuel consumption:

Gasoline	No load	Half load	Full load
60 Hz 2.8 KV	0.2 Gal/h (0.8 L/h)	0.3 Gal/h (1.1 L/h)	0.4 Gal/h (1.6 L/h)
50 Hz 2.3 KV	0.2 Gal/h (0.8 L/h)	0.2 Gal/h (0.9 L/h)	0.4 Gal/h (1.5 L/h)

LP	No load	Half load	Full load
60 Hz 2.5 KV	0.2 Gal/h (0.9 lb/h) 0.4 kg/h	0.4 Gal/h (1.5 lb/h) 0.7 kg/h	0.6 Gal/h (2.4 lb/h) 1.1 kg/h
50 Hz 2.0 KV	0.2 Gal/h (0.9 lb/h) 0.4 kg/h	0.3 Gal/h (1.3 lb/h) 0.6 kg/h	0.5 Gal/h (1.9 lb/h) 1.0 kg/h

Alternator details

Design: Cummins Onan 2-pole self-excited revolving field permanently aligned to engine by a tapered shaft with drip-proof construction
Insulation system and temperature rise: Meets ANSI/RVIA EGS-1, BS-4999 standards and CSA Electrical Bulletin 946
Cooling: Direct drive centrifugal blower
Rotor: Laminated electrical steel assembly press-fitted to shaft, balanced, heavy insulated copper wire windings
Stator: Laminated electrical steel assembly skewed for excellent waveform; heavy insulated copper wire windings
Voltage regulator: Electronic
DC brushes: Electrographite

Generator set performance

Air conditioner operation:
60 Hz: at 500 ft (152.4 m) and 100° F (38° C); 2.8 KV generator set will start and run one approved 13500 Btu air conditioner (14.7 cooling amps or less) plus a 600 W base load, or one approved 11000 Btu air conditioner plus a 1000 W base load; 2.5 KV generator set will start and run one approved 13500 Btu air conditioner plus a 300 W base load
50 Hz: at 500 ft (152.4 m) and 100° F (38° C); 2.0 KV will start and run one 7800 Btu air conditioner (5.5 cooling amps or less) with a 300 W base load
Voltage regulation: Exceeds requirements of ANSI/RVIA EGS-1 ±10%
Frequency regulation: Exceeds requirements of ANSI/RVIA EGS-1 ± 5%

Note: See your Cummins Onan distributor or certified Cummins Onan service dealer for a listing of approved air conditioners.

Cummins®, Onan®, the "C" logo, Performance you rely on.™ and Quiet Gasoline™ are servicemarks and/or registered trademarks of Cummins Inc. Specifications subject to change without notice. ©2007 Cummins Power Generation. All Rights Reserved.
A-1400h (7/07)

Dimensions: in (mm)

Basic dimensions

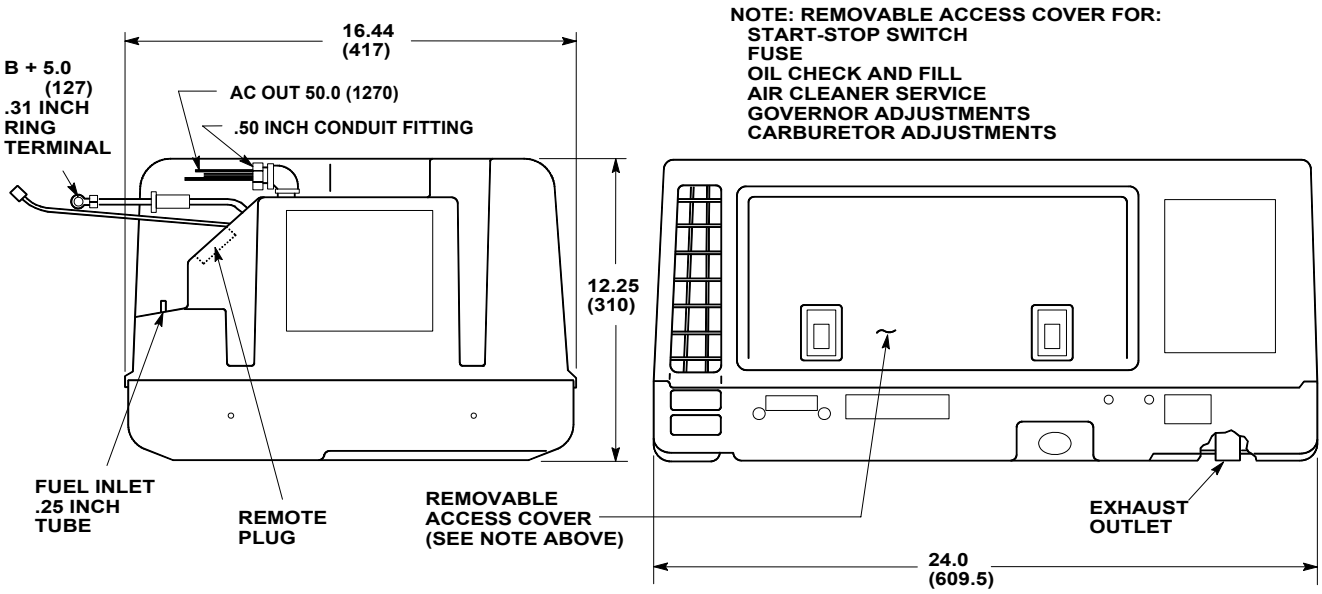

Underfloor mounting kit
(P/N 403-2689)
Quiet Gasoline 2800

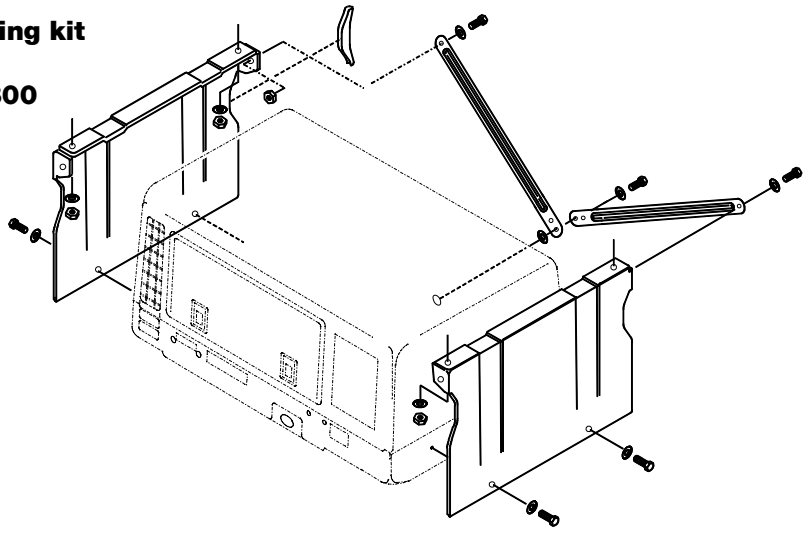

Note: This outline drawing is provided for general reference only and is not intended for design or installation. For more information see Operation and Installation manuals or obtain 500-2182 drawing and wiring diagram from your distributor/dealer.

Accessories

- Remote start/stop rocker switch (P/N 300-4936)
- Remote control with start/stop switch and running time meter (P/N 300-4937)
- Remote control with start/stop switch and DC voltmeter (P/N 300-4938)
- Remote control plug and wire harness 10 ft (P/N 388-3489-01), 30 ft (P/N 338-3489-02)
- Battery, 12 V, 360 cold cranking amps at 0° F (-18° C)
- Under floor mounting kit (P/N 403-2689)
- Tailpipe for 18-25 in exhaust installations (P/N 155-2174)
- Exhaust kit for installations over 2 in (P/N 155-2324)
- Exhaust resonator (P/N 155-2449)
- Exhaust down tube kit (PN 155-2425)
- Compartment mount installation template (P/N 539-1386)
- Under floor mount installation template (included in mounting kit P/N 403-2689) (P/N 539-0978)
- Energy Command 30 auto generator start (P/N 018-02030)
- Energy Command 20 remote start/stop with diagnostics (P/N 018-02020)
- Energy Command 15W wireless start/stop (P/N 018-02015)

Cummins®, Onan®, the "C" logo, Performance you rely on.™ and Quiet Gasoline™ are servicemarks and/or registered trademarks of Cummins Inc. Specifications subject to change without notice. ©2007 Cummins Power Generation. All Rights Reserved.
A-1400h (7/07)

Testing for RV application

- Tested at extremes of temperature -20° F (-29° C) to 120° F (49° C) for starting and operation
- Tested with RV loads, air conditioners, microwaves, converter, TVs, VCRs
- Tested installed; Cummins-owned RVs used for product development testing
- Tested in high humidity conditions
- Tested in salt spray conditions
- Tested in heavy airborne dust conditions
- Field test program
- 60 Hz (120 V only) models listed by SGS United States Testing Company, Inc. per ANSI/RVIA EGS-1 and CSA-certified per Electrical Bulletin 946
- This generator set was designed and manufactured in facilities certified to ISO 9001
- 60 Hz models meet applicable U.S. EPA and California emissions standards

Warranty policy

This Limited Warranty covers virtually everything except routine maintenance for the first two years you own your RV generator set, and covers parts and labor on major power train and generator set parts during the third year. In addition, it also includes a free 90-day adjustment policy, which provides that Cummins Inc will make minor adjustments during the first three months you own it - free of charge! Please note: This 3-year limited warranty applies to RV generator sets used in RV applications only, and does not apply to RV generator sets used in commercial mobile applications.

WARNING:

Do not use this generator set on a boat. Such use may violate U.S. Coast Guard regulations, and can result in severe personal injury or death from fire, explosion, electrocution, or carbon monoxide poisoning.

WARNING:

Back feed to a utility system can cause electrocution and/or property damage. Do not connect to any building electrical except through an approved device or after building main breaker is open.

After sale support

Complete line of parts and accessories

Cummins Inc. offers replacement and tune-up parts, accessories, oil and maintenance chemicals - all specially designed to help keep your Cummins Onan generator set running at peak performance. Cummins Inc. also provides genuine Onan Green Label Parts™ that exactly match generator set specifications and will help maximize power output and extend the life of your generator set.

Largest distributor/dealer support network

Cummins Onan generator sets are supported by the largest and best trained worldwide certified distributor/dealer network in the industry. This network of knowledgeable Cummins Onan distributor/dealers will help you select and install the right generator set and accessories to meet the requirements of your specific application. This same network offers a complete selection of commonly used generator set maintenance parts, accessories and products plus manuals and specification sheets. Plus, they can answer your questions regarding proper operation, maintenance schedules and more.

Manuals: Operation and installation manuals ship with the generator set. To obtain additional copies or other manuals for this model, see your Cummins Onan distributor/dealer and request the following manual numbers: Operation (981-0153C), Installation (981-0604), Parts (981-0238G), Service (981-0518E).

To easily locate the nearest Cummins Onan distributor/dealer in your area, or for more information, contact us at 1-800-888-6626 (or 763-574-5000), or visit www.cumminsonan.com.

Contact your distributor/dealer for more information.

Cummins **Onan**

Cummins Power Generation
1400 73rd Ave. NE
Minneapolis, MN 55432 USA
Phone 1 763 574 5000
Toll-free 1 800 888 6626
Fax 1 763 574 5298
Email www.cumminsonan.com/contact
www.cumminsonan.com

Cummins®, Onan®, the "C" logo, Performance you rely on.™ and Quiet Gasoline™ are servicemarks and/or registered trademarks of Cummins Inc. Specifications subject to change without notice. ©2007 Cummins Power Generation. All Rights Reserved.

A-1400h (7/07)